20. Application circuit

Below are AMICCOM's ref. design module, MD7105-A06, circuit example and its PCB layout.

MD7105-A06-07

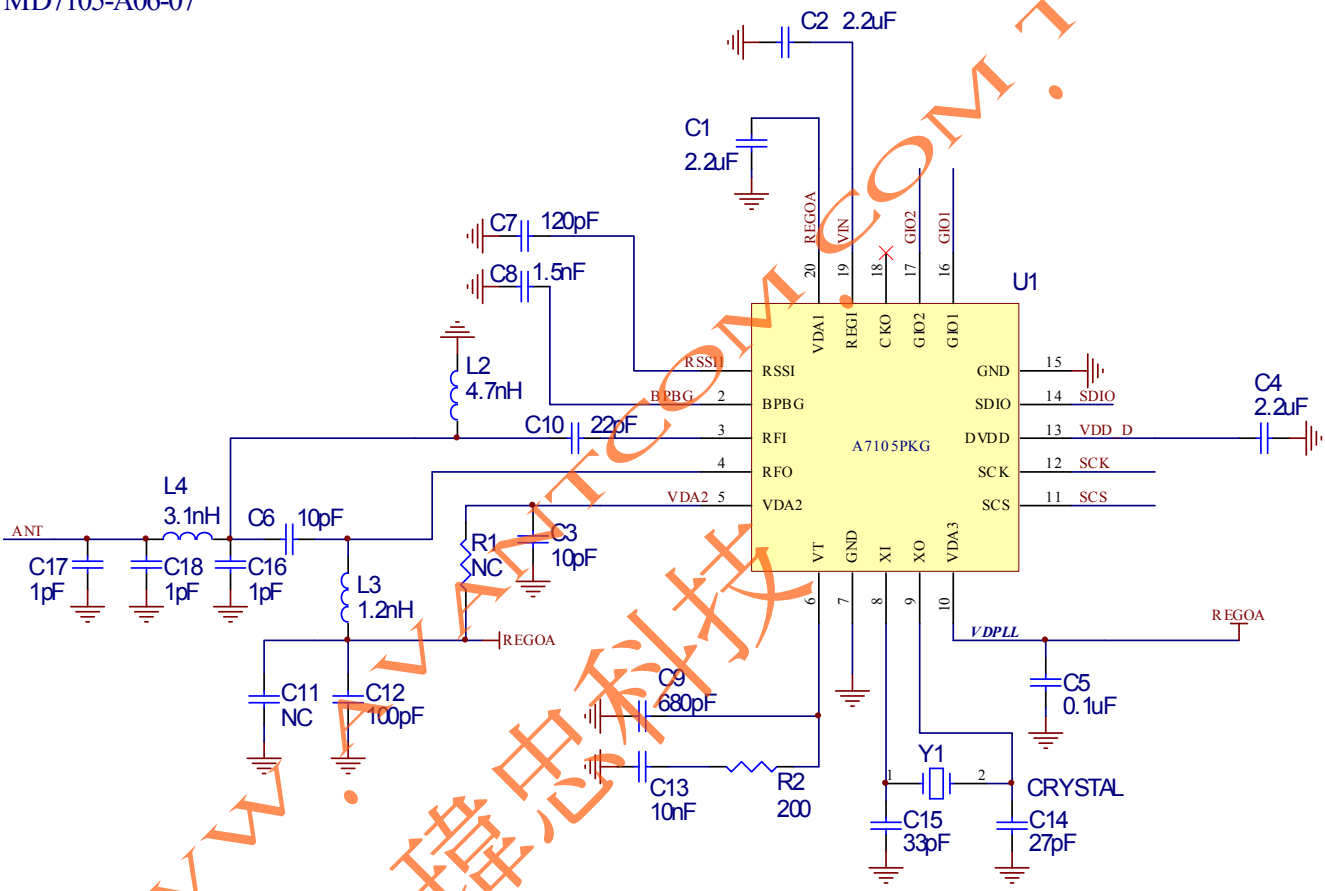

1. A7105 schematic for RF layouts with single ended 50Ω RF output.
2. C14 and C15 must be matched to the crystal's load capacitance (Cload). Y1 is a 16MHz crystal with 18 pF Cload, max 80ohm ESR and 20 ppm tolerance. Please see application note for detail.

www.vanmcom.com.tw 瑞忠科技