1/64 = .0156	3/16 = .1875	5/8 = .625
1/32 = .0312	1/4 = .25	11/16 = .6875
3/64 = .0468	5/16 = .3125	3/4 = .75
1/16 = .0625	3/8 = .375	13/16 = .8125
3/32 = .0937	7/16 = .4375	7/8 = .875
1/8 = .125	1/2 = .5	15/16 = .9375
5/32 = .1562	9/16 = .5625	

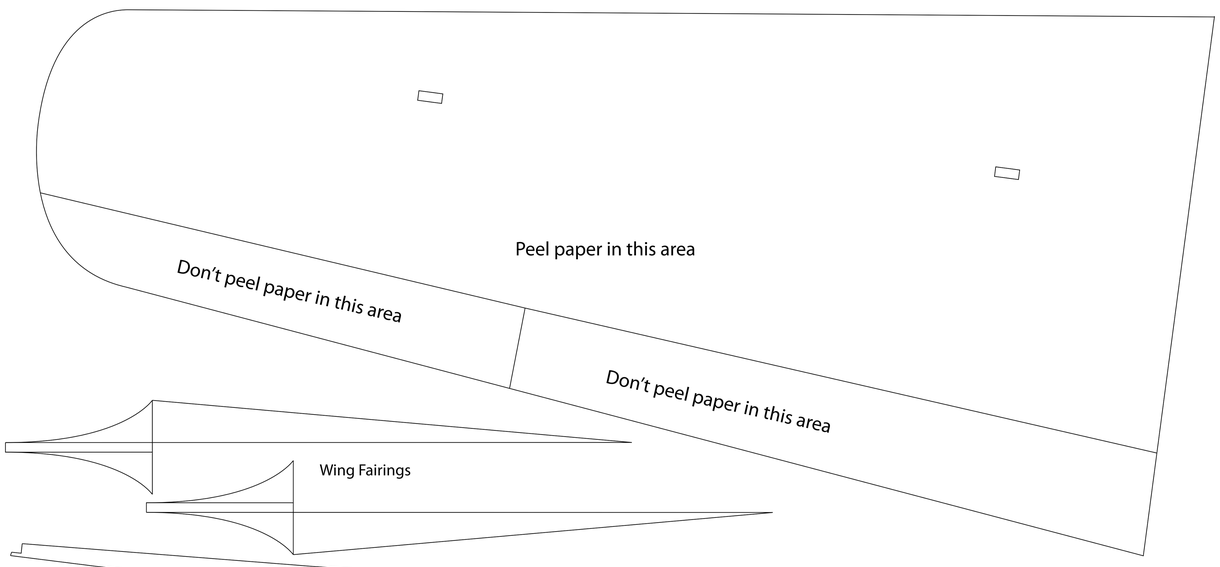

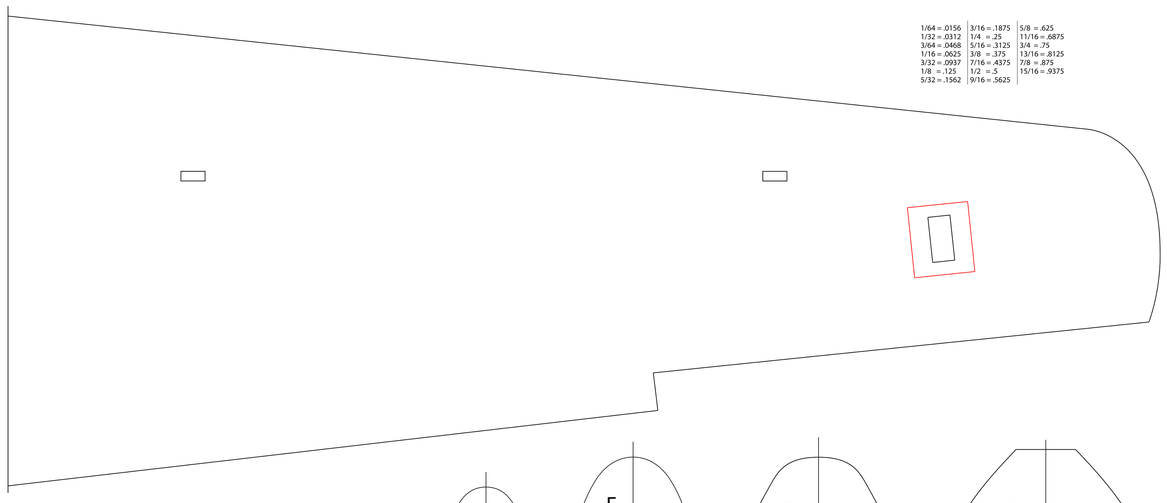

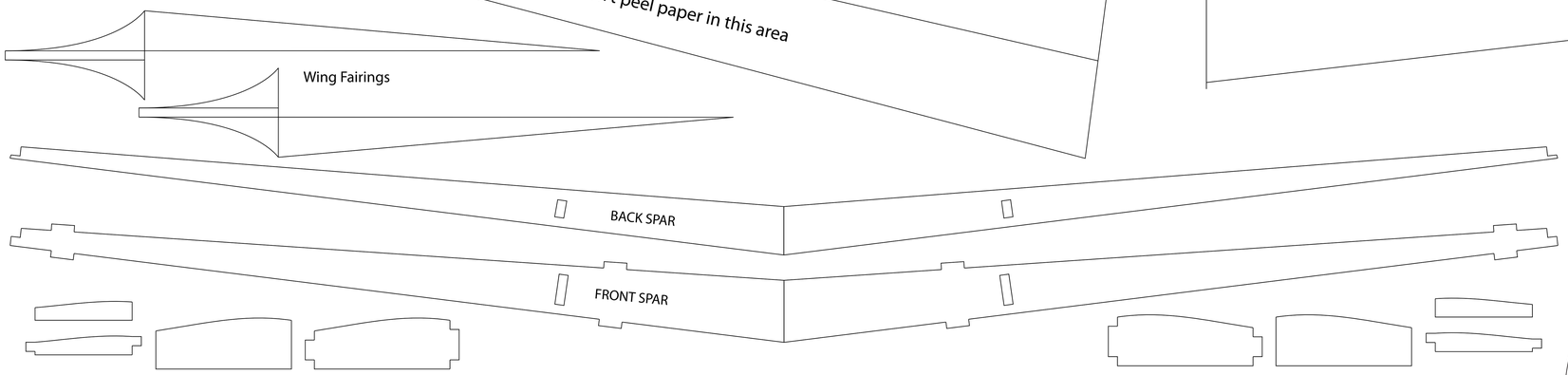

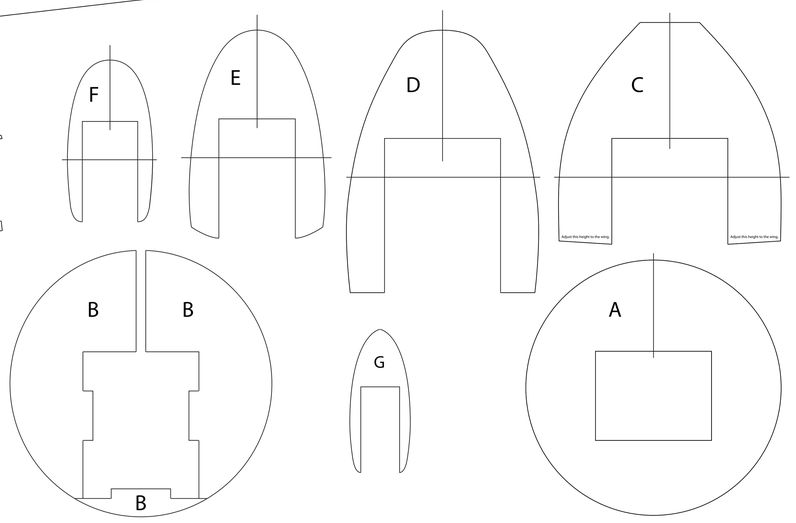

These pieces are made from hobby plywood.

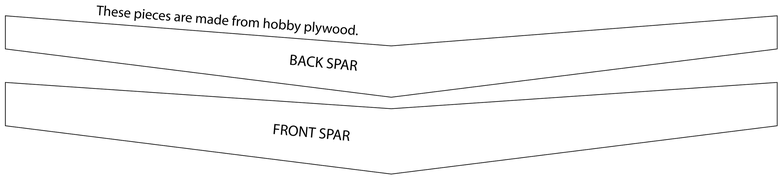

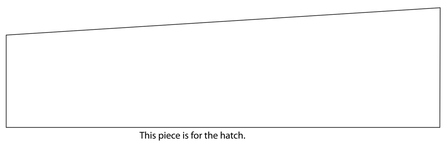

This piece is for the hatch.

This piece goes on the bottom of the fuselage behind the wing and to the rudder.

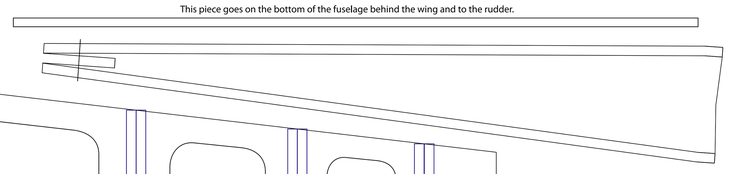

The Power Pod is the new Flite Test FT Corsiar Power Pack

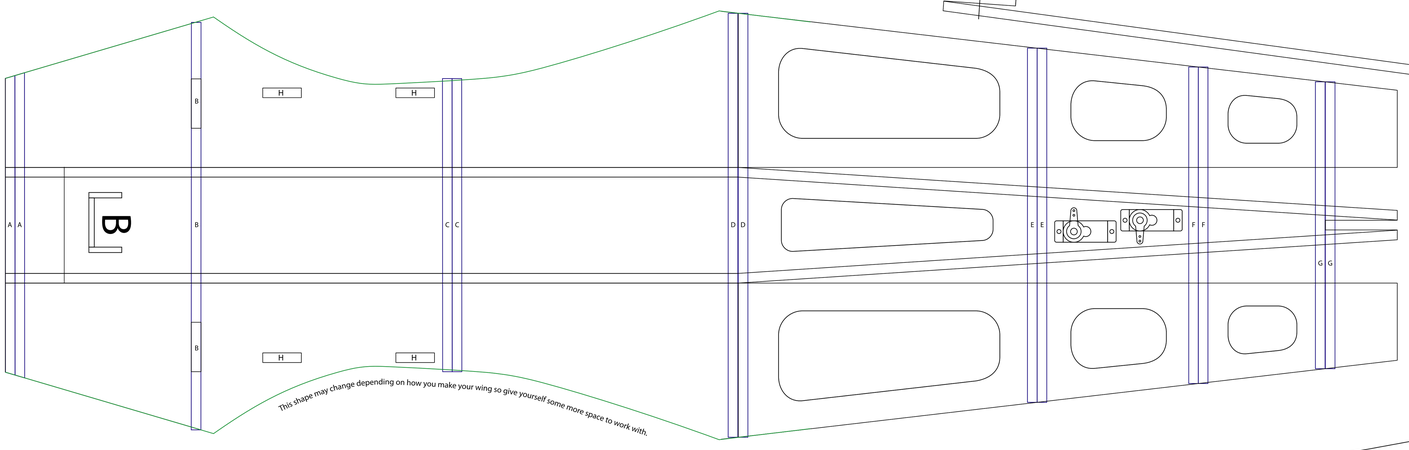

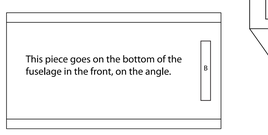

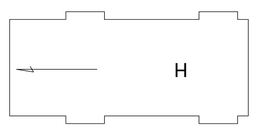

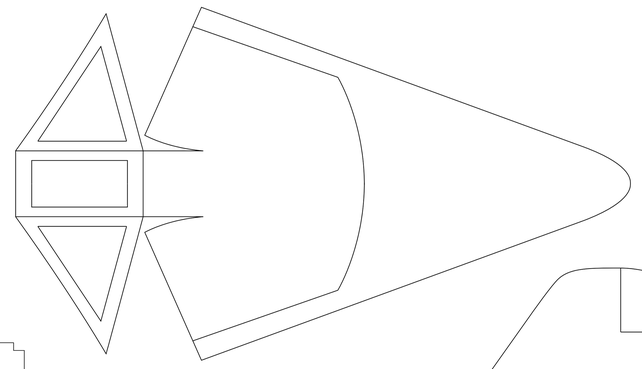

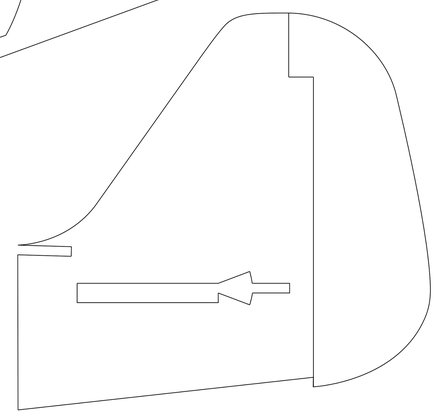

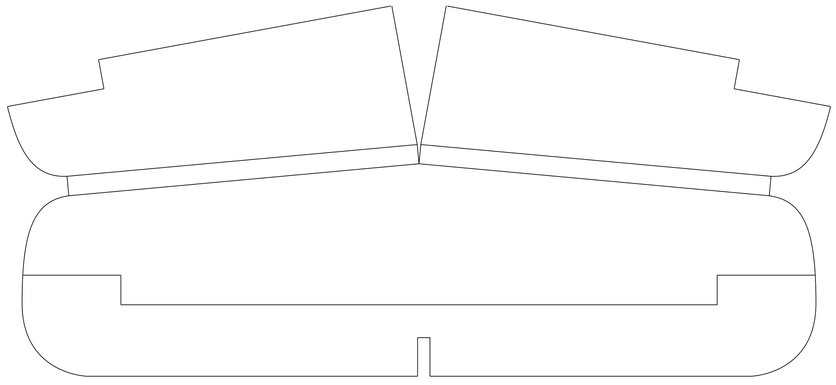

You might want to cut the length of the fuselage covering pieces a little "longer" for any adjustments that might be needed.