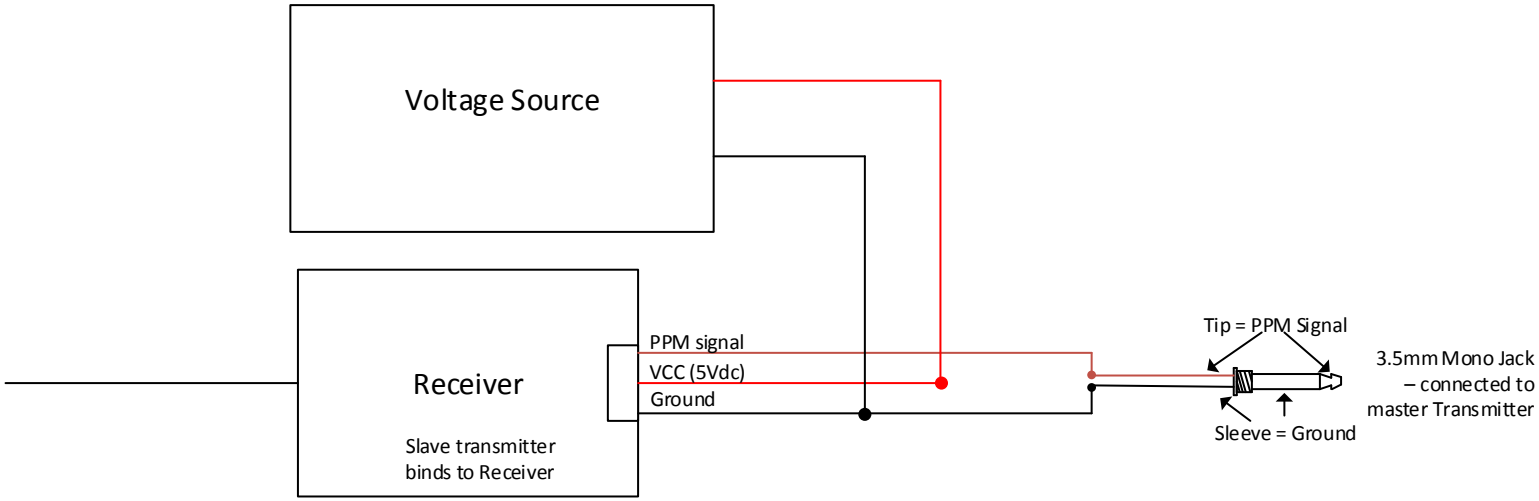
Voltage Source
Receiver
Slave transmitter
binds to Receiver
PPM signal
VCC (5Vdc)
Ground
Tip = PPM Signal
3.5mm Mono Jack
– connected to
master Transmitter
Sleeve = Ground