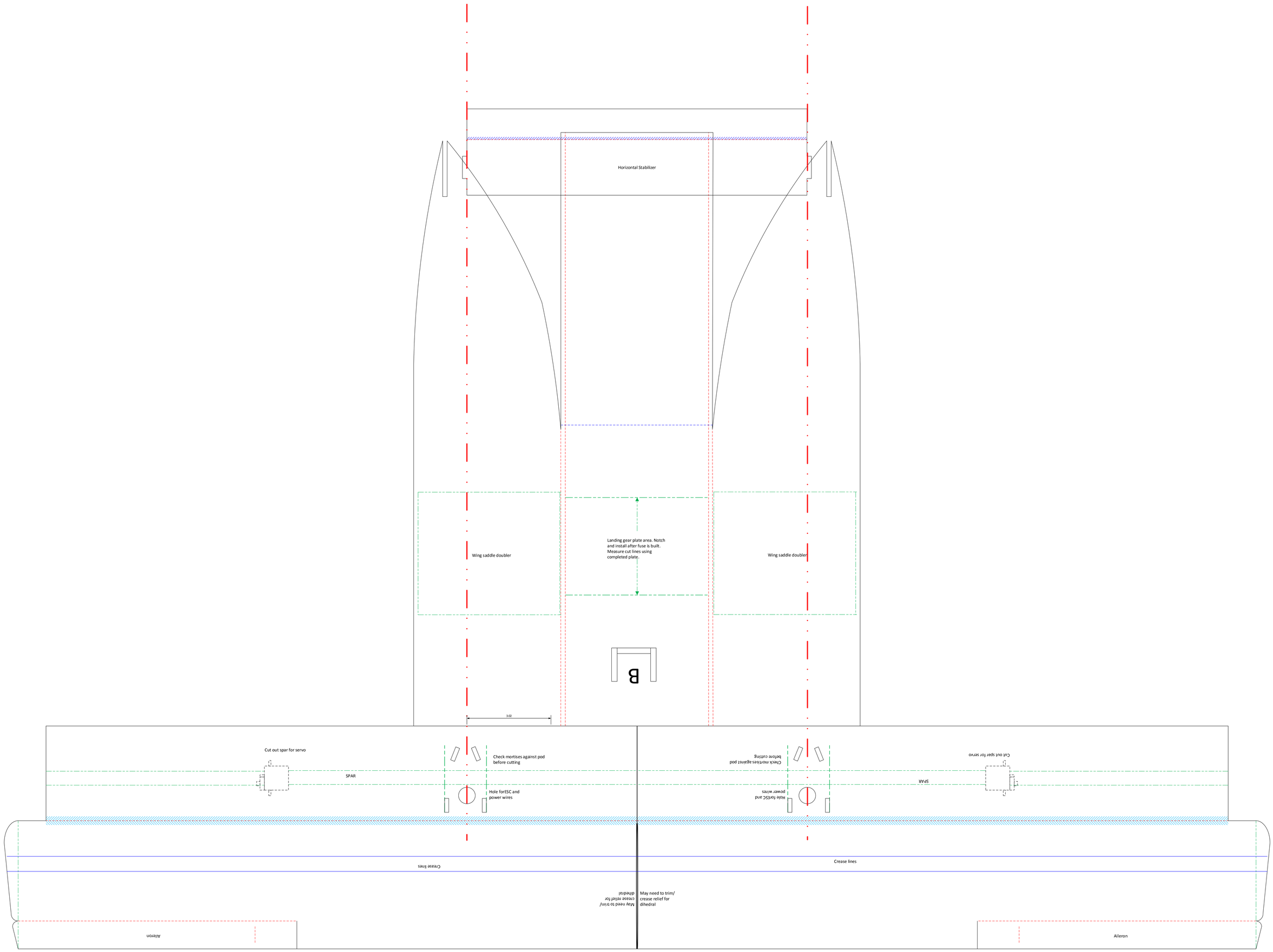
Horizontal Stabilizer
Wing saddle doubler
Landing gear plate area. Notch and install after fuse is built. Measure cut lines using completed plate.
Wing saddle doubler
B
3.02
Cut out spar for servo
Check mortises against pod before cutting
SPAR
Hole forESC and power wires
Hole forESC and power wires
Check mortises against pod before cutting
SPAR
Cut out spar for servo
Crease lines
May need to trim/ crease relief for dihedral
May need to trim/ crease relief for dihedral
Crease lines
Aileron
Aileron